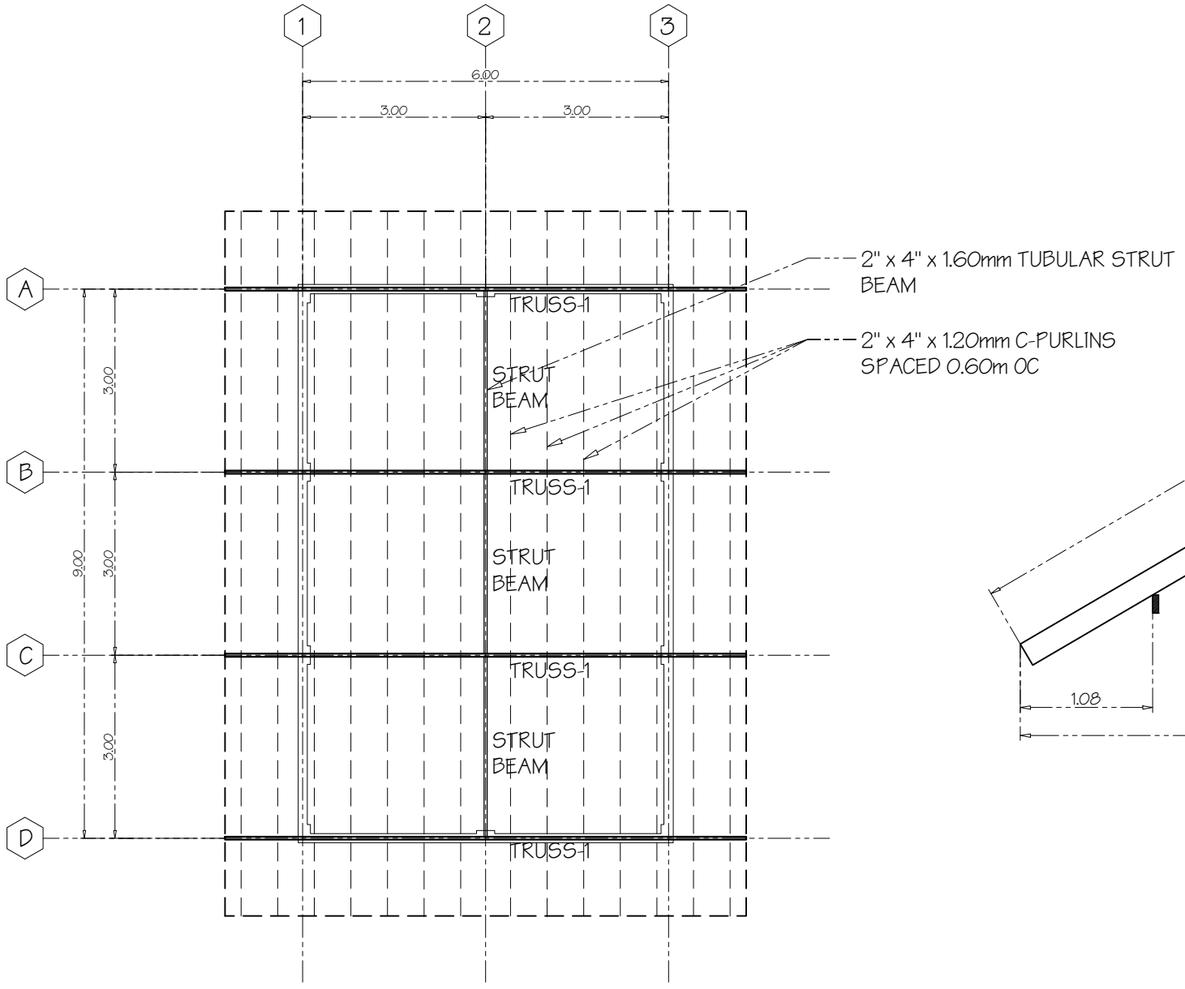

ROOF FRAMING PLAN

SCALE 1:100

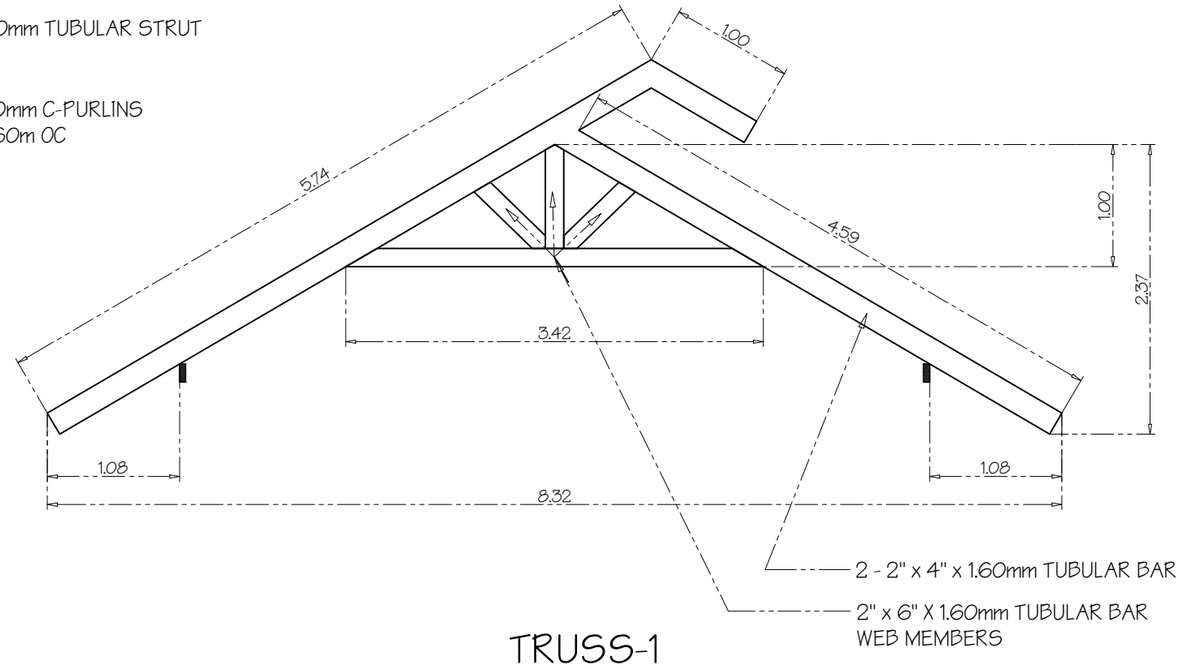

TRUSS/RAFTER DETAILS

SCALE 1:75

PHILRICE
PHILIPPINE RICE RESEARCH INSTITUTE
CENTRAL EXPERIMENT STATION
MALIGAYA, MUNOZ CITY, NUEVA ECIJA

R.A. 9266 - ART. 3, SECTION 20

Drawings and Specifications duly signed, stamped or sealed, as instruments of service are the intellectual properties and documents of the architect, whether the object for which they are made is executed or not. It shall be unlawful for any person, without the consent of the architect or author of said documents, to duplicate or to make copies of said documents for use in the repetition of and for other projects or buildings, whether executed partly or in whole.

PROJECT TITLE:

PROPOSED IMPROVEMENT OF FARMERS TRAINING CENTER BUILDING

PHILRICE - CES, MALIGAYA, CITY OF MUNOZ NUEVA ECIJA

PRODUCED BY:

PHYSICAL PLANT DIVISION
INFRASTRUCTURE UNIT
PHILRICE
SCIENCE CITY OF MU OZ, NUEVA ECIJA

NOTED:

Arch. RENATO B. BAJIT
FPD DIVISION HEAD
PHILRICE-CES

END-USER:

KAREN ELOISA T. BARROGA
DED FOR DEVELOPMENT
PHILRICE-CES

RECOMMENDING APPROVAL:

ABNER T. MONTECALVO
DED FOR ASF
PHILRICE-CES

APPROVED:

Dr. SAILILA E. ABDULA
EXECUTIVE DIRECTOR
PHILRICE-CES

DESIGN BY: RBB
DATE: SEPT. 2018
CADD BY: RABM
DATE: SEPT. 2018
CHECKED BY: RBB

SHEET NUMBER:

S3

42 51